Intermec

Installation Instructions

Label Taken Sensor Kit

(for EasyCoder PX4i and PX6i)

Intermec Technologies Corporation
Corporate Headquarters
6001 36th Ave. W.
Everett, WA 98203
U.S.A.
www.intermec.com

The information contained herein is proprietary and is provided solely for the purpose of allowing customers to operate and service Intermec-manufactured equipment and is not to be released, reproduced, or used for any other purpose without written permission of Intermec.

Information and specifications contained in this document are subject to change without prior notice and do not represent a commitment on the part of Intermec Technologies Corporation.

© 2004 by Intermec Technologies Corporation. All rights reserved.

The word Intermec, the Intermec logo, Norand, ArciTech, CrossBar, Data Collection Browser, dcBrowser, Duratherm, EasyCoder, EasyLAN, Enterprise Wireless LAN, EZBuilder, Fingerprint, i-gistics, INCA (under license), InterDriver, Intermec Printer Network Manager, IRL, JANUS, LabelShop, Mobile Framework, MobileLAN, Nor*Ware, Pen*Key, Precision Print, PrintSet, RoutePower, TE 2000, Trakker Antares, UAP, Universal Access Point, and Virtual Wedge are either trademarks or registered trademarks of Intermec Technologies Corporation.

Throughout this manual, trademarked names may be used. Rather than put a trademark (™ or ®) symbol in every occurrence of a trademarked name, we state that we are using the names only in an editorial fashion, and to the benefit of the trademark owner, with no intention of infringement.

There are U.S. and foreign patents pending.

Torx is a registered trademark of Camcar Division of Textron Inc.

Contents

1 Introduction

Description 2
Printer Firmware 2
Installation Kit 2

2 Physical Installation

Step-by-Step Instructions 4

3 Control and Adjustments

Intermec Fingerprint 8
- Controlling the LTS 8
- Adjusting the LTS 8

IPL 9
- Controlling the LTS 9
- Adjusting the LTS 9

1 Introduction

This chapter describes the label taken sensor kit for EasyCoder PX4i and PX6i printers.

Description

This Installation Instructions booklet describes how to install a label taken sensor (LTS) in an EasyCoder PX4i or PX6i printer, how to adjust the sensitivity, and how to control it in either Intermec Fingerprint or IPL.

The label taken sensor enables the printer's firmware to detect if the latest printed label (or similar) has been removed before starting to print next label. It consists of a light-emitting diode (LED) and a photoelectric sensor. The LED emits a narrow beam of light downwards towards the media outfeed area. If the light is reflected back by a label, that has not yet been removed, it will be detected by the sensor and a label-not-taken condition is assumed. The theoretical point of detection is 10 mm (0.39 in) outside the inner edge of the media path and 22 mm (0.87 in) in front of the dot line on the printhead.

Warning

This interface kit must only be physically installed by an authorized service technician. Intermec assumes no responsibility for personal injury or damage to the equipment if the installation in performed by an unauthorized person.

Follow ESD Procedures

Take precautions against electrostatic discharges, for example by wearing grounded bracelets.

Printer Firmware

Intermec Fingerprint v8.30 (or later) or IPL v2.30 (or later).

Installation Kit

The Label Taken Sensor Kit contains:

- One sensor with cable and connector
- One #T10 Torx screw
- This Installation Instructions booklet

Tool requirements: #T10 Torx screwdriver.

2 Physical Installation

This chapter describes how to physically install the Label Taken Sensor (LTS) kit in an EasyCoder PX4i or PX6i printer.

Illustrations show an EasyCoder PX4i printer, but the same principles also apply to EasyCoder PX6i printers.

Follow ESD Procedures

Step-by-Step Instructions

- Switch off the power and disconnect the power cord.
- Open the front and right-hand doors.
- Remove the eight #T10 Torx screws that hold the left-hand cover.

Warning

The electronics compartment contains high voltage components and wires. Do not open the electronics compartment before the printer is safely disconnected from any AC supply.

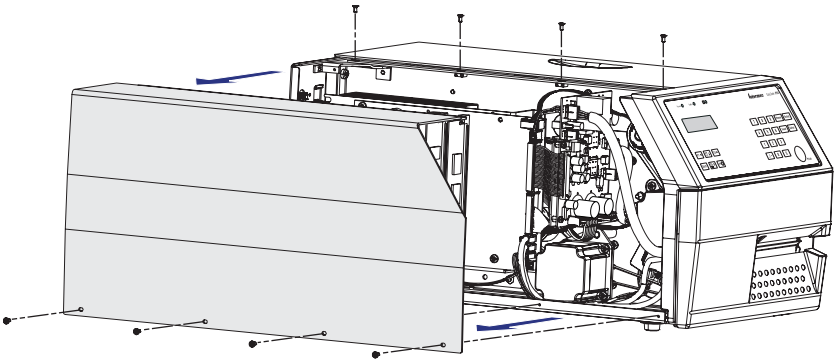

- Put the cover aside on a soft cloth or similar to avoid scratches.
- Using the screw included in the kit, fit the sensor assembly to the center section as illustrated below, making sure that the cable is held tight between the top of the print unit's inner gable and the top of the LTS bracket.

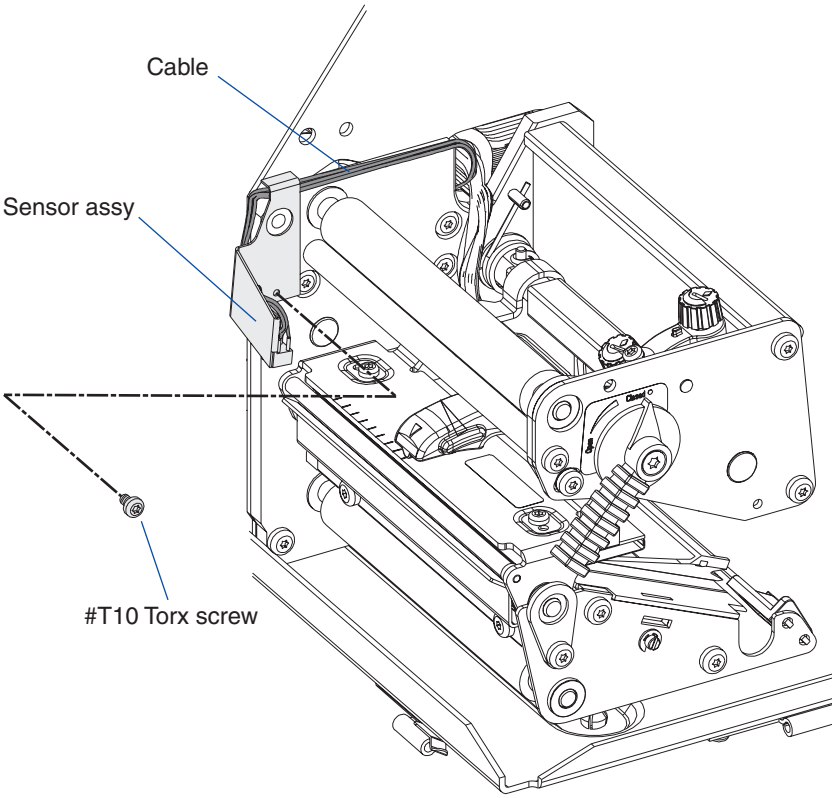

- Slip the cable with its connector through the hole in the center section and into the printer's electronics compartment.
- Connect the LTS cable to connector J53 at the lower edge of the CPU board. The connector is marked "LTS."
- Put back the cover over the electronics compartment.
- Connect the power cord and switch on the power.

3 Control and Adjustment

This chapter describes how to control and adjust the label taken sensor in printers running either Intermec Fingerprint v8.30 (or later) or IPL v2.30 (or later).

Intermec Fingerprint

Controlling the LTS

The label taken sensor can be enabled using the instructions LTS& ON and LTS& OFF respectively. The status of the LTS can be polled using the function PRSTAT. See *Intermec Fingerprint v8.30, Programmer's Reference Manual*.

Adjusting the LTS

The sensitivity of the Label Taken Sensor (LTS) may need to be adjusted according to the ambient light conditions and the reflective characteristics of the back side of the media. The sensitivity can be adjusted in the Setup Mode or by using setup files or setup strings (see *Intermec Fingerprint v8.30, Programmer's Reference Manual*). There are no straps or potentiometers for adjusting the LTS.

In the Setup Mode, the LTS setup options are only displayed if an optional label taken sensor is installed in the printer. Also refer to the *User's Guide*, chapters "Setting Up the Printer" and "Setup Mode" for instructions how to adjust the LTS.

- **LTS Adjust:**
  Press <**Enter**>. A label is fed out. Remove the label and press <**Enter**> again. A menu shows the sensitivity automatically selected by the firmware and the range in which the LTS will work. Press <**Enter**> again and you will proceed to the LTS Test menu.
- **LTS Test:**
  Press <**Enter**>. A label is fed out. Remove the label and a new label should be fed out automatically. Repeat until you are sure the LTS works properly. Then press <**Enter**> to stop and exit.
- **LTS Value:**
  Press <**Enter**>. You can enter a new value in the range indicated in the LTS Adjust menu (see above). Minimum/maximum values are in the range 0-10.

IPL

Controlling the LTS

The label taken sensor works when the printer is in self-strip mode. The self-strip mode can be enabled or disabled using the following IPL commands:

<STX>R<ETX>	enter print/configuration mode
<STX>SI>tn<ETX>	n = 1 enables self-strip n = 0 disables self-strip

Adjusting the LTS

The sensitivity of the Label Taken Sensor (LTS) may need to be adjusted according to the ambient light conditions and the reflective characteristics of the back side of the media. The sensitivity can be adjusted in the Setup Mode. There are no straps or potentiometers for adjusting the LTS.

Refer to the *User's Guide*, chapters "Setting Up the Printer" and "Setup Mode" for instructions how to adjust the LTS.

- In the Setup Mode, step to the Configuration Part.
- Select Configuration/LTS Calibration.
- Follow the instructions shown in the display.

Intermec Technologies Corporation
Corporate Headquarters
6001 36th Avenue West
Everett, WA 98203

tel +425.348.2600

fax +425.355.9551

www.intermec.com

Label Taken Sensor Kit—Installation Instructions

1-960632-00